NORM·O·TEMP®

Operation Manual

Model 111Z Hyperthermia System

A GENTHERM COMPANY

Cincinnati Sub-Zero Products, LLC • 12011 Mosteller Road • Cincinnati, Ohio 45241, U.S.A.
www.cszmedical.com

NORM-O-TEMP®, MAXI-THERM®, MAXI-THERM® LITE, Gelli-Roll® and PLASTI-PAD® are registered trademarks of Cincinnati Sub-Zero Products, LLC, Cincinnati, Ohio USA.

Copyright 2016 Cincinnati Sub-Zero Products, LLC. All rights reserved.

Manual 57425 Rev. I
ECN M605-5102

SYMBOLS

Caution: Read Operation Instructions and Manual Before Operating

Temperature Set

Fuse

Water Temperature

Increasing Temperature

Silence Alarm

Temp. Set Point Indicator

Decreasing Temperature

Fill to Strainer

Water Flow Indicator

Inlet

69 kPa

Outlet

Heat

Risk of Explosion: Do not use in the Presence of Flammable Anesthetics

Disconnect Power Before Servicing

Power Cord Holder

I / O On / Off

~ AC Voltage

Danger; Risk of Electric Shock

Type BF Equipment

Separate collection for electrical and electronic equipment

Protective Earth (Ground)

Earth (Ground)

Equipotentiality

Clean Water Filter Quarterly

Caution

Low Water Level

High Limit / Over-Temperature Safety Limit

Change Water Monthly

Cincinnati Sub-Zero Products, LLC, reserves the right to make changes to the device, which may not be reflected in this manual.

WARNING

- A physician's order is required for the use of the device and setting the temperature of the blanket/pad. At least every 20 minutes, or as directed by physician, check patient's temperature and skin condition of areas in contact with blanket/pad; also, check blanket/pad water temperature. Pediatric patients, temperature-sensitive patients with vascular disease, surgical patients, diabetic and Reynaud's disease patients should be checked more frequently. If patient's temperature does not reach desired set point or differs drastically from recommended set point, notify physician. **Notify the physician promptly of any change in patient status in order to avoid serious injury or death.**
    1. Pediatrics – Infants and children's body temperatures are often more responsive to surface heating and cooling than adults. Due to their size, the effect of heating or cooling a child is likely more pronounced because of their higher ratio of skin contact area to body mass.
    2. Temperature Sensitive Patients – Patients with impaired peripheral blood circulation and patients who are incapacitated may be more sensitive to temperature changes than patients with normal circulation.
    3. Surgical Patients – Patients with poor circulation due to inadequate heart function, loss of blood, or impaired peripheral blood circulation may be more sensitive to temperature changes.
- The method of temperature control provided by all hyperthermia units presents the danger of heating body tissues, particularly the skin, to a point where they are injured. Depending on the extent and severity of a burn, **very serious and even fatal complications may arise.**
- Do not use the NORM-O-TEMP® System distal to arterial cross clamping. **Thermal injury may result.**
- Prevent excessive and/or prolonged tissue pressure and shearing forces, especially over bony prominences, to prevent **skin damage that may result.**
- Do not place additional heat sources between the patient and blanket/pad. **Skin damage may result.**
- **The area between the patient and the blanket/pad should be kept dry to avoid injury to patient.** Prep solutions have been reported to injure the skin when allowed to remain between patients and a water-circulating heating blanket/pad during prolonged procedures.
- **Proper sanitation procedures must be practiced and hygienic safety must be maintained, to prevent contamination.** Contamination can affect patient's health, i.e. skin irritation/rash may result.
- Do not use the NORM-O-TEMP® system in the presence of flammable anesthetics. **Risk of explosion can result.**
- Power interruption will cause the NORM-O-TEMP® unit to revert to Preset Set point Temperature resulting in possible inaccurate therapy to the patient. Follow instructions for First Time Set-Up/System Test Routine located in the Operation/Technical Manual to resume operation. **Failure to resume therapy could result in serious injury or death.**
- Do not by-pass ground lug. **Electrical Hazards may result.**
- Any time water is found leaking into or around the unit, connecting hose, and/or blanket/pad, turn the unit off, disconnect the power cord from its power source, and correct the problem before proceeding. **Water leaks could lead to electric shock. Water leaks could also present a slip hazard.**

•	**Water leaks present a risk of infection** and should be handled accordingly. Proper sanitation procedures should be followed including, but not limited to, the preventative maintenance described in this manual. **Leaky blanket/pad(s) or hoses should never be used.**
•	**Exercise extreme caution if the unit is used for patients who are electrically susceptible** (probe, catheter, or electrodes connected to the heart).
•	Do not position unit near any objects that can generate a strong electrical/magnetic field. **Potential electromagnetic interference may result.**
•	Always **unplug the unit** before accessing internal components during service. Failure to unplug the unit could result in **electric shock.**
•	To avoid the **risk of electric shock**, this equipment must only be connected to a supply mains with protective earth.
•	The repair, calibration, and servicing of the NORM-O-TEMP® unit should be performed by qualified Medical Equipment Service Technicians, Certified Biomedical Engineering Technicians, or Certified Clinical Engineers familiar with good repair practices for servicing medical devices, and in accordance with instructions contained in the Operation / Technical Manual. **Improper repair could result in damage to the NORM-O-TEMP® system and possible patient injury.**
•	**Before** returning the NORM-O-TEMP® unit to patient use **after** repairs, the FIRST TIME SET-UP/SYSTEM TEST ROUTINE in the Operation/Technical Manual must **always** be performed. **Improper repair and inadequate maintenance can result in damage to the NORM-O-TEMP® system and patient injury.**
•	Remove the NORM-O-TEMP® from service if the outer casing or membrane control panel is cracked or internal components are exposed. **Contact with internal components could result in electric shock or thermal injury to the patient or operator and exposure to sharp edges.**
•	Keep the vents clean and free of debris and obstruction. **Blockage of the vents could result in the unit overheating which could render the unit unable to provide adequate therapy; excessive surface temperatures could cause injury of patient or operator. Keep unit, specifically the vents away from curtains or other obstructions.**
•	The warming of transdermal medications (patches) can **increase drug delivery, resulting in possible injury to the patient.**
•	**Thermal injury may occur** if heating/cooling therapy is applied to ischemic limbs.
•	Means to maintain contact between the patient and the blanket during therapy may be required and should not block the fluid pathways of the blanket or connecting hose. **Failure to do so may result in inadequate treatment.**
•	**Blanket punctures can result in an increased risk of infection or electrical shock.** Inspect all blankets for mechanical damage before use. Do not use in proximity to sharp objects.
•	Use of materials of good thermal conductivity, such as water, gel, and similar substances, with the NORM-O-TEMP® system not switched ON may decrease the temperature of the patient. **The area between the patient and the blanket should be kept dry to avoid injury to patient.**
•	Use only hospital grade plug or **electric shock may result**.

CAUTION
• Caution: Federal law restricts this device to sale by or on the order of a licensed healthcare professional.
• **Use distilled water only. Do Not Use De-Ionized water.**
• **Do not** use alcohol. Alcohol may cause blanket/pad and unit deterioration.
• **Do not** overfill. Overfilling may result in overflow when the water in the blanket/pad drains back into the system when the system is turned off.
• Always drain the NORM-O-TEMP® system to a sanitary drain because **bacteria** may be present in the unit's water supply.
• Working with electronic boards, plugs, and cables requires careful handling. Proper **Electrostatic Discharge (ESD) practices should be followed during replacement of any electronic board.**
• To Discharge the NORM-O-TEMP® system, ensure the unit is unplugged and use any metal tool, such as a screwdriver, with an insulated handle to simultaneously touch both pins on the power cord.
• The operator must regularly monitor the patient whenever hyperthermia or normothermia therapy is used.
• For safe handling and use of chemicals follow manufacturer guidelines.
• The device is still energized when the power switch is in the off position. To completely disconnect the device from the power source, remove the power cord plug from the power source.
• **Unapproved blanket/pad(s) or hoses should never be used. Always use CSZ recommended blankets/pads.**
• No modification of this equipment is allowed without prior, written authorization from CSZ.

TABLE OF CONTENTS

SYMBOLS 3
Warnings and Cautions..... 4
TABLE OF CONTENTS 7
Technical Help 9
Before you call for Service... 9
In-Warranty Repair and Parts..... 9
Receiving Inspection 9
Important Safety Information 9
NORM-O-TEMP® System Operating Instructions Quick Start Guide..... 10
Section 1. Introduction 11
1-0. General Safety Precautions..... 11
1-1. General Description of this Manual 11
1-2. Description of the NORM-O-TEMP® Hyperthermia System 11
1-3. Physical Description of the NORM-O-TEMP® System 12
1-3.1. External Features and Descriptions – Front View 12
1-3.2. External Features and Descriptions – Left Side View..... 14
1-3.3. External Features and Descriptions – Rear View..... 16
1-3.4. External Features and Descriptions – Right Side View..... 18
1-3.5. External Features and Descriptions – Top View..... 20
1-4. Required Accessories..... 22
1-5. Functional Description of the NORM-O-TEMP® System..... 22
1-5.1. Heating System 22
1-5.2. Circulating System 22
1-5.3. Temperature Safety Control System..... 22
Section 2. Specifications and Certifications 24
Section 3. General Preparation of the NORM-O-TEMP® System..... 26
3-0. Introduction..... 26
3-1. Unpacking the Shipment 26
3-2. First Time Set-Up / System Test Routine..... 26
3-2.1. Inspecting and Arranging the Equipment 26
3-2.2. Completing a System Test Routine 28
3-3. Unit and Patient Related Precautions..... 29
3-4. Patient Preparation and Bedside Care..... 29
3-5. Alarms and Error Displays 30
Section 4. Operating the NORM-O-TEMP® System 32
4-0. Introduction..... 32
4-1. Arranging the System Components..... 32
4-2. Operating the NORM-O-TEMP® System..... 33
4-3. Concluding the Use of the NORM-O-TEMP® System 33
Section 5. General Maintenance of the NORM-O-TEMP® System 35
5-0. Introduction..... 35
5-1. Maintenance of Water Reservoir 37
5-1.1. Internal Clean using Bleach / Dry Storage Procedure..... 37
5-1.2. Internal Cleaning and Disinfection Using Gigasept FF / Dry Storage Procedure 38
5-1.3. Internal Cleaning and Disinfection Using Maranon H / Dry Storage Procedure..... 40
5-1.4. Draining the Reservoir 41
5-1.5. Replenishing the Reservoir / Fixing a Low Water Alarm 41
5-2. Maintenance of the Water Filter 42
5-3. Maintenance of the NORM-O-TEMP® Exterior – Cleaning Instructions..... 43
5-4. Maintenance of the Hyper-Hypothermia Blanket / Pad(s)..... 43

5-4.1. Cleaning / Maintenance of Reusable Blanket / Pad(s) 43
5-4.2. Cleaning / Maintenance of Disposable, Single-Patient Use Blanket / Pad(s) 44

TABLE OF FIGURES

Figure 1. NORM-O-TEMP® unit, Front View 13
Figure 2. NORM-O-TEMP® unit, Left Side View 15
Figure 3. NORM-O-TEMP® unit, Rear View 17
Figure 4. NORM-O-TEMP® unit, Right Side View 19
Figure 5. NORM-O-TEMP® unit, Model 111Z Top View. 21
Figure 6. NORM-O-TEMP®, Model 111Z Features 25
Figure 7. NORM-O-TEMP® Maintenance Checklist 36
Figure 8. NORM-O-TEMP® System Accessories 45

Technical Help

United States and Canada	Telephone	1-513-772-8810
Cincinnati Sub-Zero Products, LLC	Toll Free	1-800-989-7373
12011 Mosteller Road	Fax	1-513-772-9119
Cincinnati, OH 45241	(U.S.) 24hr Clinical Support	1-513-460-2038
	E-Mail	csz@cszgentherm.com

Visit our Web Site at www.cszmedical.com

Before you call for Service...

To help us better serve you, please have the serial number of your NORM-O-TEMP® unit ready when you call for parts or service. The serial number is located on the specification label on the back of the unit.

In-Warranty Repair and Parts

All parts on your NORM-O-TEMP® unit are covered by a one-year (1) warranty. Additional warranties are available at the time of purchase or during the warranty period. To return defective parts or units, first obtain a Returned Materials Authorization (RMA) number from our Medical Technical Service department.

Receiving Inspection

After unpacking the NORM-O-TEMP® System, be sure to inspect the system for concealed damage. Retain all packing material and carefully describe or photograph any damage. Notify the carrier at once and ask for an inspection (in writing). Failure to do this within 15 days may result in loss of claim. Do not return the equipment to Cincinnati Sub-Zero. Call our Medical Technical Service department for further instructions.

Important Safety Information

Refer to this manual for instructions and caregiver information. Read and understand all precautionary information before using, prescribing, or servicing the NORM-O-TEMP® unit. Reference the Operation/Technical manual for service instructions.

NORM-O-TEMP® System Operating Instructions Quick Start Guide
Read Operation Manual before using this device

First Time Use Cleaning:

Refer to Section 5-1.1, 5-1.2, and 5-1.3 for cleaning instructions.

Initial Operation:

1. Fill reservoir with distilled water
2. Insert power cord plug into hospital grade outlet
3. Connect hyperthermia blanket or pad
4. Turn power switch "ON"

Unit will go through an 8-10 second calibration cycle to test all indicators and will flash the set point temperature of 42°C. Observe Water Flow Indicator on the side of the unit to verify that the pump is circulating water when blanket/pad is connected. The unit will start heating to a preset temperature of 42°C/107°F. To change the desired set point temperature, proceed to step 5 below.

5. Depress the "TEMP SET" button. The display will flash the previous set point temperature or the default temperature of 42°C/107°F if the unit has been turned OFF, and then back ON. NOTE: You have five seconds to depress one of the arrows or the temperature readout will return to the actual reservoir water temperature.
6. Depress the "UP" ▲ or "DOWN" ▼ arrow to raise or lower the set point temperature to the desired setting.
7. Select the desired temperature scale using the "C/F" button (Celsius or Fahrenheit)

Draining Instructions:
1. Turn "OFF" power switch.
2. Allow gravity to drain the water back into the unit from the blanket/pad.

Alarm Conditions:
- If an alarm sounds, check indicator lights or display for problem and take corrective action.
- Alarm may be silenced temporarily for five minutes by depressing the "Silence Alarm" button.
- The "Silence Alarm" button will not silence the alarm when "ERR" appears on the display or "HIGH TEMP" indicator light comes on and does not flash. Power cord should be removed from outlet and the unit sent to Biomedical Engineering for repair.

CAUTION:
- This device should be operated only by trained personnel, under the direction of a physician.
- Patients vary in degree of sensitivity to cold, heat, and pressure.
- The patient's temperature and skin conditions should be checked at least every 20 minutes, or as directed by a physician, while on a thermal blanket.

Section 1. Introduction

1-0. General Safety Precautions

To provide the patient maximum safety during the use of the NORM-O-TEMP® hyperthermia system, a thorough knowledge and understanding of the system, and the correct application and operating use are required. Each person who is responsible for use or direction of use of the system, such as physicians, nurses, technicians and operators must read and understand this operating manual and all precautions and warnings prior to use. It is recommended this manual be reviewed at least semi-annually as a refresher to safe operation and application. For proper knowledge and understanding, in-service training is available upon request. **Failure to read, understand, or follow operating manual could result in serious injury or death.**

1-1. General Description of this Manual

This manual describes the operation, maintenance, and service of the NORM-O-TEMP® hyperthermia system.

This manual is prepared for professional personnel who use the NORM-O-TEMP® hyperthermia system for patient care as well as technicians and service personnel who are responsible for maintaining the equipment. All personnel who operate or service the unit should be familiar with all parts of this manual.

Physical and functional characteristics are described in Sections 1-3 and 1-5

1-2. Description of the NORM-O-TEMP® Hyperthermia System

Intended Use

The NORM-O-TEMP® Model 111Z hyperthermia system is intended to prevent hypothermia during surgical procedures and to reduce cold discomfort before, during, and after a surgical procedure. The thermal regulating system is used to keep a patient comfortable by maintaining blanket/pad water temperature through conductive heat transfer. The water heated blankets transfer the thermal energy to adult, pediatric, and infant (includes neonates) patients to keep a patient at a comfortable temperature. The NORM-O-TEMP® system is composed of a heater, circulating pump, and blankets/pads. It is intended for use by appropriately trained healthcare professionals in clinical environments.

Intended Environment

The NORM-O-TEMP® hyperthermia system is used in the Operating room, Post Anesthesia Care Units, Recovery rooms, Intensive Care Units and Emergency Rooms.

The NORM-O-TEMP® hyperthermia system is intended for use in ambient temperatures of 15°C – 30°C (59°F – 86°F). The maximum contact surface temperature is 41°C (105.8°F).

NORM-O-TEMP, Model 111Z

The NORM-O-TEMP®, Model 111Z hyperthermia System is used to keep a patient comfortable by maintaining blanket/pad water temperature through conductive heat transfer. The NORM-O-TEMP® hyperthermia system is composed of a heater, circulating pump, safety high limit, and microprocessor board.

Distilled water is heated and pumped from the unit to a blanket/pad. The blanket/pad rests under, around, and/or on top of the patient. The water circulates through the blanket/pad and

returns to the unit. When warmed water is circulated through the blanket/pad, the patient is warmed. The unit is designed to operate based on the temperature of the circulating water.

The recommended blankets/pads for use are listed in Figure 8 Accessories.

1-3. Physical Description of the NORM-O-TEMP® System

See Section 2 for specifications and certifications of the NORM-O-TEMP® system.

1-3.1. External Features and Descriptions – Front View

The external features in Figure 1 of the NORM-O-TEMP® unit are described as follows:

A. The control panel is composed of pressure sensitive touch switches and an LED display. An expanded description of the membrane control panel is presented in Section 1-3.5.

B. The operating instructions printed below the control panel describe the necessary steps to operate the unit.

C. The power switch is a bevel rocker switch labeled "I" (on) at the top and "O" (off) at the bottom.

D. The four rubber feet help the unit to mount on the I.V. stand (Catalog #118), the low profile stand (Catalog #119) or allow the unit to sit on a flat surface.

E. The water fill opening is where the operator pours distilled water to fill the reservoir.

F. The red, Power Fail LED is the visual indicator when power is disconnected with the switch still in its on position or when the independent mechanical (High Limit) safety is activate

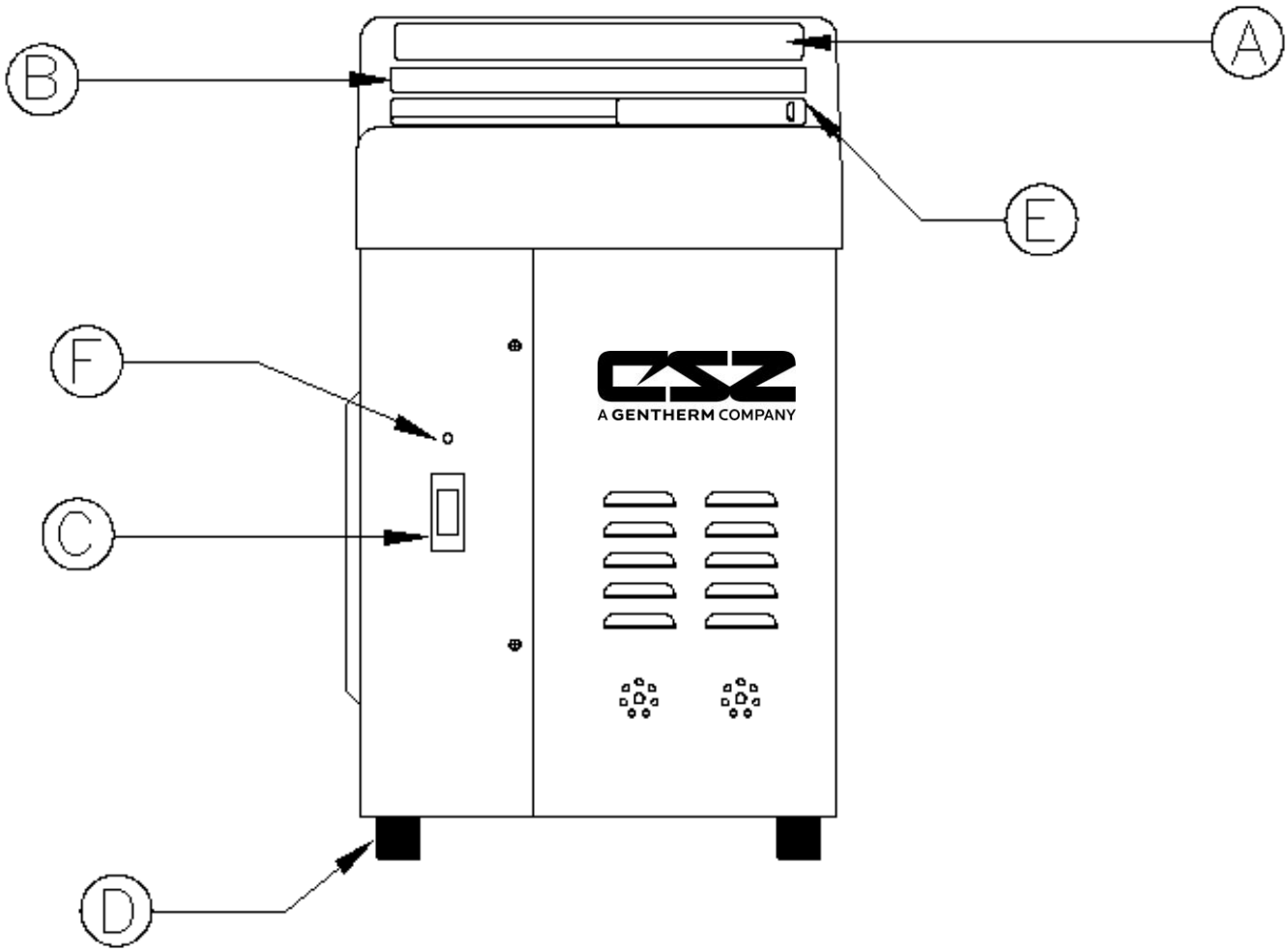

Figure 1. NORM-O-TEMP® unit, Front View

1-3.2. External Features and Descriptions – Left Side View

The external features in Figure 2 of the NORM-O-TEMP® unit are described as follows:

A. The water flow indicator is a paddle wheel immersed in the path of the circulating water with a window to the outside. As water is circulated through the system, it must pass over the paddle wheel causing it to spin (like a pinwheel) when water returns to the NORM-O-TEMP®. The water flow indicator provides a visual display of the general rate at which the water is circulating. For example, if the unit is circulating water but the connecting hose is pinched, the circulation of the water is restricted. The change in water flow decreases the speed of the paddle wheel.

   The water flow indicator only spins when a blanket/pad or by-pass hose is connected to the unit. It will not spin when water is circulated internally to pre-condition the water. A total obstruction of the water path will cause the paddle wheel to stop completely.

B. Two screws on the left and right side of the unit secures the top to the base.

C. Two female Hansen fittings, quick-disconnect return couplings, on the top row are designed for water to flow in when the male coupling of the connecting hose is attached.

D. Two male Hansen fittings, quick-disconnect outlet couplings, on the bottom row are designed for water to flow out when the female coupling of the connecting hose is attached.

E. The recessed handle, one on each side, is provided to assist in lifting the unit on and off the stand or when carrying the unit.

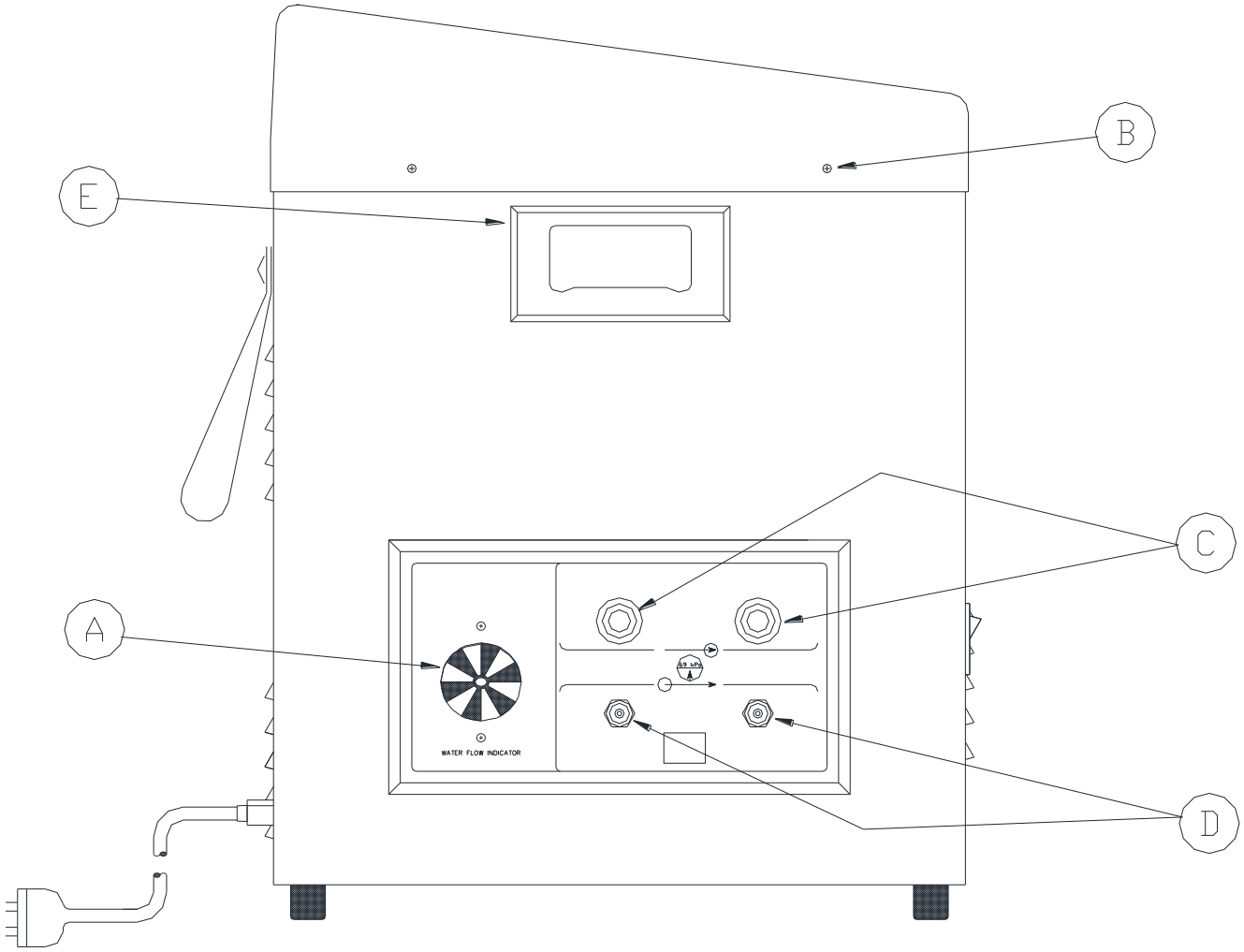

Figure 2. NORM-O-TEMP® unit, Left Side View

1-3.3. External Features and Descriptions – Rear View

The external features in Figure 3 of the NORM-O-TEMP® unit are described as follows:

A. The specification label outlines the NORM-O-TEMP® unit's electrical requirements.

B. Sets of air vents provide air circulation for the internal components.

C. The nylon straps are used to secure and store the coiled power cord and/or the connecting hose when not in use.

D. The serial number printed on the Spec Label and located just above the power cord.

E. Units have a disconnectable power cord and should only be inserted into a properly grounded mating receptacle of a hospital grade specified by local codes and practices. Electrical specifications are described in Section 3.

F. Ground Lug: Provided to allow connection to the patient area common equipotential ground system.

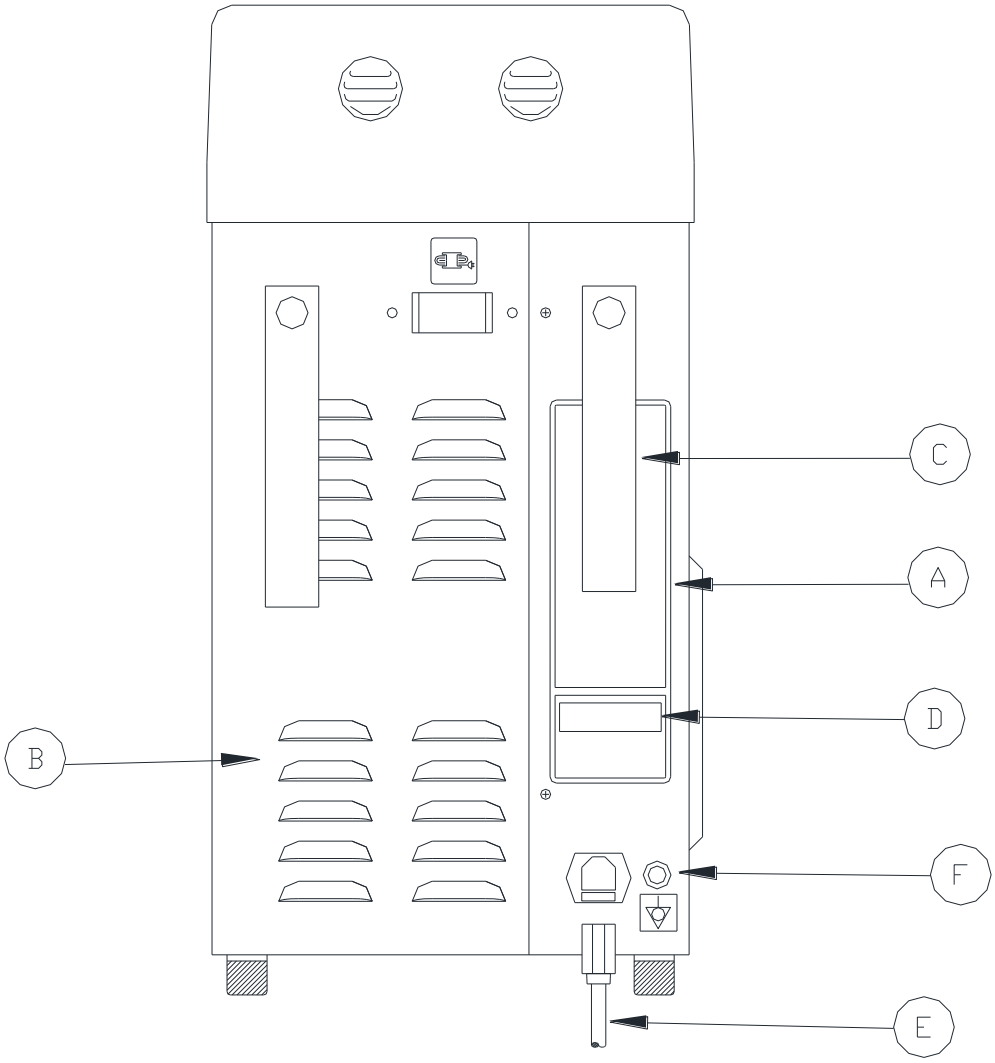

Figure 3. NORM-O-TEMP® unit, Rear View

1-3.4. External Features and Descriptions – Right Side View

The external features in Figure 4 of the NORM-O-TEMP® unit are described as follows:

A. The three sided enclosure panel, secured with eight screws, provides access to the interior.

B. The recessed handle is one of two provided to assist in lifting the unit.

C. Two screws on the right and left side of the unit secure the top to the base.

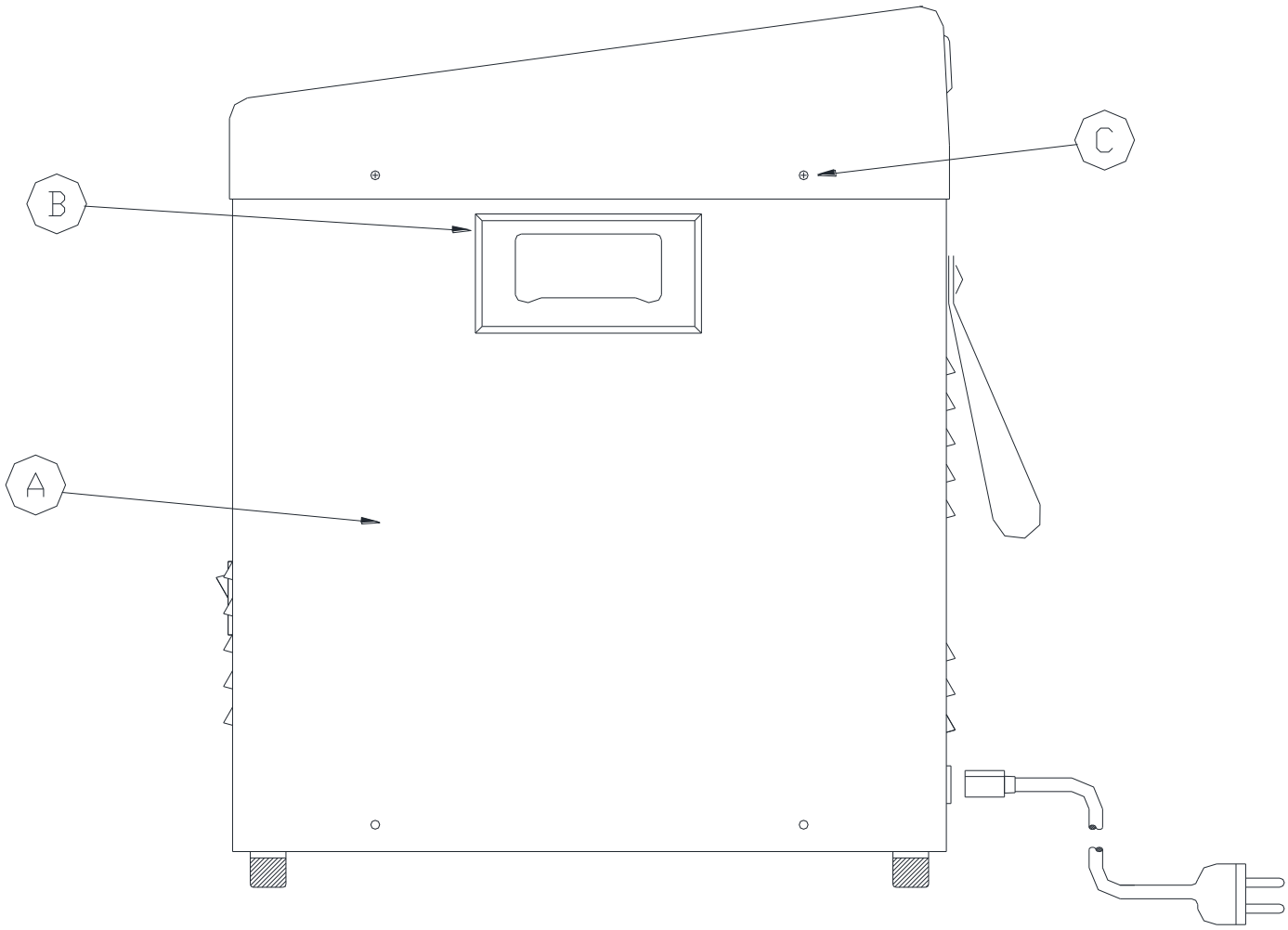

Figure 4. NORM-O-TEMP® unit, Right Side View

1-3.5. External Features and Descriptions – Top View

The membrane control panel as shown in Figure 5 is composed of pressure sensitive touch switches and LED displays.

The membrane control panel is divided into the following sections:

A. The four digit LED display shows the actual water temperature and set point temperature. The temperature can be displayed in Celsius or Fahrenheit.

B. When the HEAT LED is lighted, it indicates that the water is being heated.

C. The HI TEMP LED will flash and the audible alarm will sound when the water temperature reaches 43.5°C ± 0.6°C (110°F ± 1.08°F).

The HI TEMP LED will illuminate and the audible alarm will sound when the water temperature reaches 44.5°C ± 0.6°C (112°F ± 1.08°F).

The HI TEMP LED will illuminate, the power fail LED will illuminate and the audible alarm will sound when the water temperature reaches 46.0°C ± 0.6°C (115°F ± 1.08°F).

D. When the LO WATER LED is lit it indicates that the unit needs more distilled water to operate. The LED will be accompanied by an audible alarm.

E. The SILENCE ALARM button will silence the primary HI TEMP and LO WATER audible alarms for five minutes and if the problem is not solved, the alarm will sound again until the button is pressed or the problem is solved.

F. The TEMP SET button is used to display the desired water temperature. When this button is pressed, the display will flash the set point temperature for five seconds.

G. The INCREMENT and DECREMENT buttons are used to raise or lower the set point temperature. There is a five second interval to set the temperature up or down after pressing the TEMP SET button.

H. The C/F button allows the operator to select the measurement scale, Celsius or Fahrenheit, by which the unit functions.

I. The operating instructions allow the operator to clearly see the directions and efficiently use the unit.

J. The fill reservoir lid slides to the left to open and to the right to close.

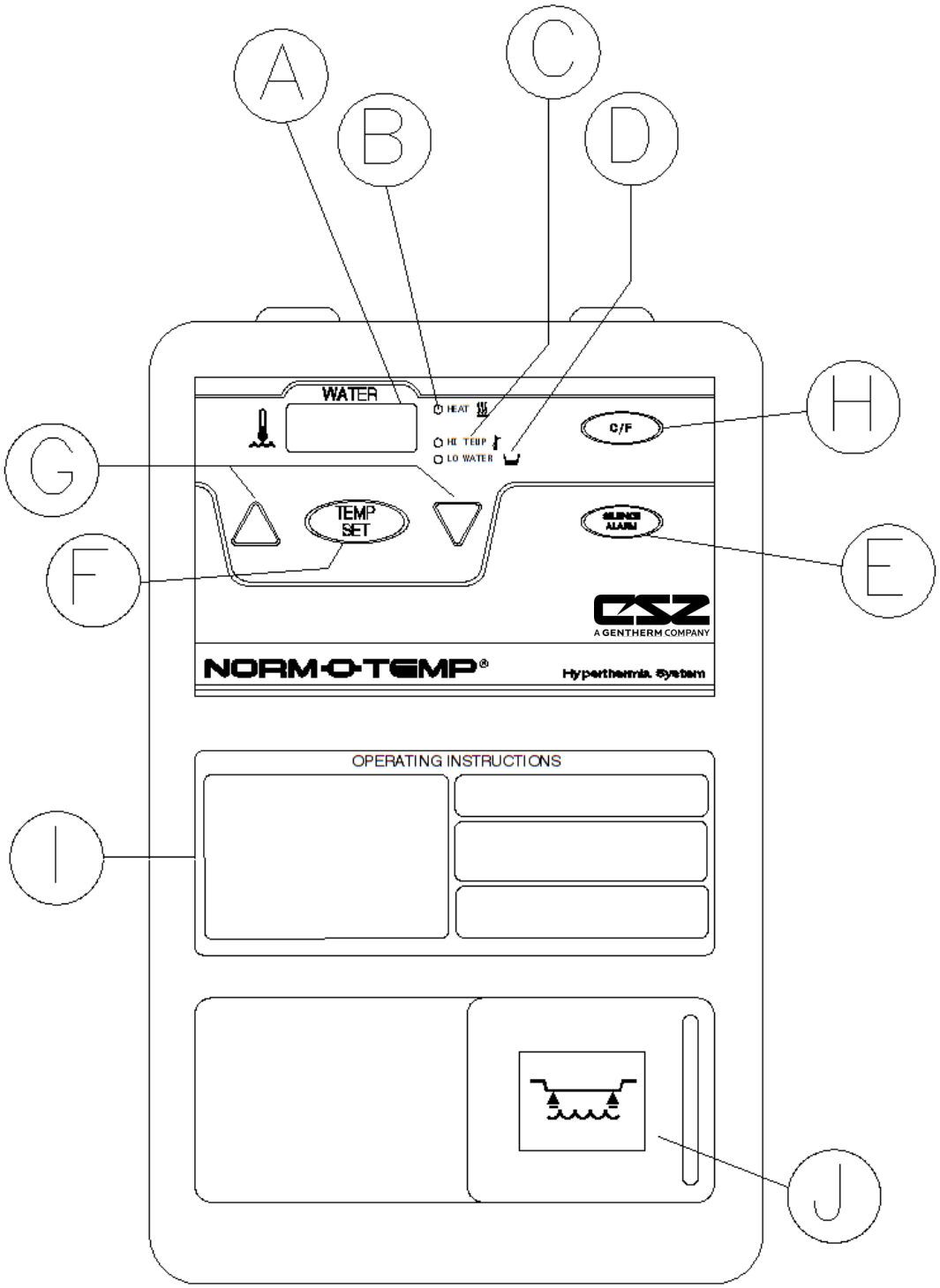

Figure 5. NORM-O-TEMP® unit, Model 111Z Top View.

1-4. Required Accessories

Operation of the NORM-O-TEMP® unit requires the use of the blanket/pad(s) designed to circulate warm water via a connecting hose with quick-disconnect male and female couplings. NORM-O-TEMP® System Equipment and accessories are listed in Figure 8.

Note: Some reusable blankets/pads come with a permanently attached hose.

1-5. Functional Description of the NORM-O-TEMP® System

When started up, the NORM-O-TEMP® unit heats the water to reach a preset set point temperature of *42°C/107°F unless an alternate temperature is selected by the health care provider. The water circulates through the blanket/pad(s) which keeps a patient comfortable.

*42°C = 107.6°F, which will truncate to 107°F on the display.

1-5.1. Heating System

The NORM-O-TEMP® heating system consists of an immersion heater and water temperature control. The temperature ranges are described in Section 2.

The immersion heater is located in the circulating reservoir. The water circulating in the reservoir flows around the immersion heater and is warmed.

It is important to note that the rate of change in the circulating water temperature <u>is not</u> directly proportional to the rate of change in the temperature of the patient.

1-5.2. Circulating System

The NORM-O-TEMP® 6-quart (5.7 liters) capacity dual compartment reservoir is composed of the circulating reservoir situated under and connected to the replenishing reservoir. When the operator fills the reservoir with distilled water, the circulating reservoir fills first and holds approximately 1 ½ quarts (1.4 liters) of water. The remaining 4 ½ quarts (4.2 liters) are held in the replenishing reservoir. The water moves from the replenishing reservoir to the circulating reservoir by gravitational pull as needed.

The circulating water flows over the heating element located in the circulating reservoir. The heated water then flows out the reservoir to the circulating pump, through the pump housing, over the water temperature sensor, and into the blanket /pad(s). The water circulates through the blanket /pad(s) and returns to the unit. The water then passes through the water flow indicator and returns to the circulating reservoir to be reheated and then recycled.

An internal by-pass inside the NORM-O-TEMP® by-passes the Hansen fittings and the flow indicator for water circulation during preconditioning of the water.

The circulating water system contains a flow indicator. The operator should check the flow indicator for proper flow when operation is first begun with a blanket or bypass hose attached.

In addition, the circulating reservoir contains a low water level sensor which shuts down the unit and sounds an alarm if the water level drops below 1 ½ quarts (1.4 liters). The unit becomes operational after the water level is restored to normal.

1-5.3. Temperature Safety Control System

The NORM-O-TEMP® unit is designed to carefully measure and control the temperature of the circulating water by heating. The unit is engineered so that when the temperature of the

circulating water reaches the desired set point, the heater cycles on and off to maintain that set point temperature. The unit is designed to stay within 0.6°C of the selected temperature.

The microprocessor board continuously monitors the temperature of the circulating water and each unit is protected by an independent high limit safety. As an additional precaution, if the water temperature sensor itself should fail, the unit shuts down, the alarm sounds, and the display will read ERR (for error). With this safety design, the patient is protected from injury and the unit from damage caused by extreme high temperatures.

CAUTION
• The operator must regularly monitor the patient whenever hyperthermia or normothermia therapy is used.

Safety Controls for Protection from High Temperature

If the circulating water reaches 42.0°C ± 0.6°C (107.6°F ± 1.08°F), the microprocessor shuts off heater.

If the circulating water reaches 43.5°C ± 0.6°C (110°F ± 1.08°F), the primary high temperature safety will activate to turn off the pump, and turn off the heater. In addition, the HI TEMP LED flashes and the audible alarm sounds.

If the circulating water reaches 44.5°C ± 0.6°C (112°F ± 1.08°F) the secondary high temperature safety will activate to turn off the pump, and turn off the heater. In addition, the HI TEMP LED illuminates and the audible alarm sounds.

If the circulating water reaches 46.0°C ± 0.6°C (115°F ± 1.08°F) the independent mechanical high temperature safety will activate to shut off the power to the pump and shut off the power to the heater. In addition, the HI TEMP LED and Power Fail LED illuminate, and the audible alarm sounds.

Section 2. Specifications and Certifications

Specifications for the NORM-O-TEMP® unit are presented in Figure 6 and are subject to change without notice.

Physical	Control System
Dimensions: 22.86 cm (9 inches) Wide 38.14 cm (15 inches) Deep 46.99 cm (18 ½ inches) High **Weight:** 15.2 kg (33.5 lbs) empty 20.6 kg. (45.5 lbs) filled **Ambient Temperature (during use):** 15°C – 30°C (59°F – 86°F) **Cabinet Construction:** Powder-coated steel with plastic top. Dual reservoir. Built-in handles.	Microprocessor-based temperature control system, and Alarm indications. Option to select temperature settings as either °C or °F **Controller Range:** Water Temperature Heating Only: 32°C-42°C / 89.6°F-107.6°F **Controller Accuracy:** Water Temperature: ±0.6°C (±1.08°F) **Display Range:** Water Temperature Display: 0°C - 52°C / 32°F-122°F
Alarms	
High Temperature: Audible and Visual **Low Water:** Audible and Visual **Defective Water Temperature Sensor:** Audible and Visual **Water Flow Indicator:** Visual **Power Failure:** Audible and visual **Greater than 1° Over Set point:** Audible and Visual	**Display Type:** LED Display. **Temperature Settings:** Water Temperature increments. 1°C / 1°F **Service Life** The expected service life / lifetime of the NORM-O-TEMP®, Model 111W unit is **ten (10) years** from the date of manufacture provided the product is not subject to misuse, negligence, accident or abuse and under the conditions that the device is properly used as intended, and serviced and maintained according to the Operation/Technical Manual provided with the device.

Figure 6. NORM-O-TEMP® unit, Model 111Z Features

Electrical System

Electrical Characteristics:
115V, 60Hz, 9.2 Amps

Heater Power:
800 watts

Time to Heat:
23°C ± 2°C to 37°C in approximately 7 minutes at ambient temperature.

Power Cord:

3 Conductor, detachable, 16/18 AWG, hospital grade plug

Leakage Current:
Under 300μa

Fuse
10 Amp in IEC 320 connector

Mains Supply Isolation:
Two-Pole Mains Switch

Warranty

1 year parts. Parts and labor if returned to factory. Additional Warranty Available

Safety System

Maximum High Control Setting
42°C / 107.6°F

Primary Temperature Limit:
43.5°C ± 0.6°C (110.0°F ± 1.08°F)

Secondary Temperature Limit:
44.5°C ± 0.6°C (112.0°F ± 1.08°F)

Independent Mechanical Temperature Limit:
46.0°C ± 0.6°C (115.0°F ± 1.08°F)

Environmental Conditions

(during storage and transportation)

Ambient Temperature (transportation and storage):
-40°C – +50°C (-40°F – +122°F)

Humidity (transportation and storage):
20% – 95%

UL Electrical Classification
Equipment is Class I.
Equipment is Type BF.

IP22

CERTIFICATIONS

CLASSIFIED C UL US 16HV

Medical Electrical Equipment
In Accordance With:
UL 60601-1 2nd Ed.
IEC 60601-1-2 3rd Ed.
ASTM F-2196-2

Figure 6. NORM-O-TEMP®, Model 111Z Features

Section 3. General Preparation of the NORM-O-TEMP® System

3-0. Introduction

This section describes the procedures to prepare the NORM-O-TEMP® unit for general use. This entails unpacking the shipment, arranging all the equipment for the first time, and completing a test routine. This section also outlines the cleaning agent preparations, standard safety precautions, and patient preparation/bedside care when using the hyper-hypothermia blanket/pad(s). Technical support is available upon request.

3-1. Unpacking the Shipment

WARNING
• Remove the NORM-O-TEMP® from service if the outer casing or membrane control panel is cracked or internal components are exposed. **Contact with internal components could result in electric shock or thermal injury to the patient or operator.**

Open the top of the carton and remove the top foam insert. Lift the unit from the box. Locate and remove the manual.

During the unpacking process, look carefully for signs of shipping damage. If any unacceptable damage is found, notify the transportation company immediately and file a claim. The transportation company is responsible for the shipment after it leaves the factory. If problems other than shipping damage are found, notify your Cincinnati Sub-Zero representative or manufacturer (Cincinnati Sub-Zero Products LLC) directly.

3-2. First Time Set-Up / System Test Routine

This section describes the tasks necessary to inspect and arrange the equipment for the first time after unpacking and describes a System Test Routine to check out the membrane control panel.

The System Test Routine can also be used to teach operators unfamiliar with the equipment how to use the unit.

3-2.1. Inspecting and Arranging the Equipment

A. Place the NORM-O-TEMP® unit on an uncluttered work surface that is accessible to the correct power source. Position the unit so that the membrane control panel faces the operator.

   OPTION: The NORM-O-TEMP® unit can be mounted on an optional Low Profile stand with casters or an optional I.V. Stand. For installation instructions, see insert packaged with the stand.

B. Visually inspect the NORM-O-TEMP® unit to determine that there are no missing parts, dents, or punctures.

C. Examine the power cord for cuts or exposed wires and the power plug for bent or missing prongs.

D. Review Section 1-3 to identify the features of the NORM-O-TEMP® unit.

E. Collect and arrange the following equipment and supplies:
   1. Hyper-hypothermia blanket/pad(s) Listed in Figure 8.
   2. Connecting hose with quick-disconnect Hansen fittings (if applicable).

F. Mount the NORM-O-TEMP® unit on the proper stand (if applicable).
   1. To mount the NORM-O-TEMP® unit on IV Pole Stand:
      i. Place the NORM-O-TEMP® unit on the equipment pan with the rear of the unit facing the IV pole. Slide the NORM-O-TEMP® unit toward the IV pole until the rubber bumper touches the pole
      ii. Fasten the NORM-O-TEMP® unit by turning the knurled knobs (on the underside of the equipment pan) clockwise into the threaded holes on the bottom of the NORM-O-TEMP® unit. Hand tighten knurled knobs until snug.
      iii. Fasten the mounting bracket around the lower IV pole near the bumper on the rear of the NORM-O-TEMP® unit with the two stainless steel machine screws provided.
   2. To mount the NORM-O-TEMP® unit on the Low Profile Stand:
      i. Place the NORM-O-TEMP® unit on the equipment pan so that the threaded holes on the bottom of the unit line up with the knurled knobs (on the underside of the equipment pan).
      ii. Fasten the NORM-O-TEMP® unit by turning the knurled knobs clockwise into the threaded holes on the bottom of the NORM-O-TEMP® unit. Hand tighten knurled knobs until snug.

G. Slide the lid of the water fill opening and add 340 cc of propylene glycol then gradually pour approximately 6 quarts (5.7 liters) of distilled water into the reservoir. DO NOT USE DE-IONIZED WATER OR TAP WATER. Stop pouring when the water reaches the strainer visible at the bottom of the water fill opening. DO NOT OVERFILL.

H. Connect the blanket/pad(s) to the NORM-O-TEMP® unit by attaching the quick-disconnect female Hansen socket of the connecting hose to a male outlet Hansen plug (on the bottom row) of the unit. Attach the male quick-disconnect Hansen plug of the connecting hose to a female return Hansen socket (on the top row) of the unit. Each blanket/pad must be connected to one outlet coupling and one return coupling of the connecting hose if necessary.

   1. To attach the Hansen fittings:
      i. Grasp the quick-disconnect female Hansen socket of the connecting hose
      ii. Slide the collar back towards the hose
      iii. Push the female Hansen socket of the hose over a male Hansen plug of the unit
      iv. Allow the collar to SNAP into place and return to its original position
      v. Gently pull on the connecting hose to assure a positive connection
      vi. Next, push back the collar of a female Hansen socket on the unit with one hand
      vii. With the other hand, insert the male Hansen plug of the connecting hose
      viii. Release the collar of the female Hansen socket
      ix. Push the male Hansen plug until it SNAPS into position
      x. Gently pull the connecting hose to assure a positive connection

   2. To attach a blanket/pad to the connecting hose (if necessary):
      i. Insert one end of the blanket/pad to the plastic outlet coupling of the connecting hose

ii. Insert the other end of the blanket/pad to the plastic return coupling of the connecting hose
iii. Gently pull on the blanket/pad to check that the connection is secure.

I. Assure that the blanket/pad is lying flat and that the connecting hose to the unit is not twisted or pinched.

J. Check that the power switch of the unit is in "O" position (unit is off).

K. Insert the appropriate power cable. DO NOT BY-PASS GROUND LUG AS ELECTRICAL HAZARD MAY RESULT.

3-2.2. Completing a System Test Routine

After arranging the equipment described in Section 3-2.1, complete this System Test Routine which describes what switches to press and the changes to observe.

ALARM NOTE: *If power is removed from the unit without actuating the power switch (I/O switch) a power fail alarm is activated and the LED located on the front panel of the unit flashes. To stop alarm, restore power to the unit and push the SILENCE ALARM button.*

ALARM NOTE: *If at any time the water falls below the minimum level, the LO WATER LED is activated and the alarm sounds. The unit shuts down and the operator cannot proceed until this is corrected by filling the reservoir.*

A. Make sure that the power switch is in the "I" position (unit is turned on).
   1. A beeper sounds.
   2. The microprocessor board goes through self-test.
   3. The seven segment display reads CAL for several seconds.
   4. All segments of the seven segment display flash on and off (8888's) for a few seconds along with the LED's.
   5. A beeper sounds.
   6. The seven segment display flashes the set point temperature 42°C for a few seconds and the unit begins to pump and heat the water.
   7. The seven segment display will show the actual water temperature.
   8. The HEAT LED will light up if the water temperature is less than 42°C/107.6°F.

B. Press C/F button.
   1. A beeper sounds.
   2. The seven segment display changes from 42°C to 107°F.

C. Press the TEMP SET button.
   1. A beeper sounds.
   2. The seven segment display will begin to flash the set point temperature 42°C/107°F. Each time the operator presses the TEMP SET button after just having turned on the unit, the set point temperature will display 42°C/107°F.
   3. After pressing the TEMP SET button, the operator has five seconds to change the set point temperature by pressing either the INCREMENT ▲or DECREMENT ▼buttons.

D. Press the DECREMENT ▼ button during the five second interval after pressing the TEMP SET button.

1. A beeper sounds each time it is pressed but does not beep when held down continuously.
2. The set point display changes; the numbers move down the scale. The lowest set point is 20°C/68°F. However, the operating range of the device is from 32°C/89.6°F to 42°C/107.6°F.

E. Press the INCREMENT ▲ button during the five second interval after pressing the TEMP SET button.
   1. A beeper sounds each time it is pressed, but does not beep when held down continuously.
   2. The set point display changes; the numbers move up the scale. The highest setting is 42°C/107°F.

F. To complete this test routine, press the Power switch to the "O" position.
   1. The control panel goes blank.
   2. The water flow indicator stops.

G. Disconnect the power cord, loosely coil it and attach it to the nylon straps on the back of the unit.

H. Check the blanket/pad for leaks. Water leaks present a risk of infection to the patient because the water is not sterile. If a leak is found, the blanket/pad should not be used.

I. Check the couplings at the unit and at the blanket/pad for positive connection.

J. To drain the water from the reusable blanket/pad simply shut off power to the unit and allow the water to drain from the blanket/pad back into the NORM-O-TEMP® unit.

   For reusable PLASTIPAD blanket/pad(s), disconnect the connecting hose from the unit. Loosely coil the hose lengthwise in the center of the blanket/pad. Fold the blanket/pad lengthwise into the center, 1/3 from the left side and 1/3 from the right side.

   For reusable Gelli-Roll blankets/pads either lay them flat or roll the blanket/pad. Do not fold the Gelli-Roll blankets/pads as folding may damage blanket/pad.

   For single-use blanket/pad(s) follow the instructions packaged with the blanket/pad.

The NORM-O-TEMP® unit, connecting hose, and blankets/pads are now ready for patient use.

3-3. Unit and Patient Related Precautions

This unit requires both distilled water and electricity to operate.

NOTE: *Please consult the beginning of the manual for a complete list of warnings and cautions related to the NORM-O-TEMP® system.*

3-4. Patient Preparation and Bedside Care

Effective use of the NORM-O-TEMP® hyperthermia system must include proper patient care prior to and while using the hyper-hypothermia blanket/pad(s).

A. A base line recording should be made of vital signs, level of consciousness and responsiveness.

B. It is recommended that a dry sheet be placed between the hyper-hypothermia blanket/pad and the patient when using PLASTI-PAD, GELLI-ROLL or MAXI-THERM Blanket/pad(s).

Standard nursing procedures while using a hyper-hypothermia blanket/pad include the following tasks:

A. Patient core temperature and the condition of the skin in contact with the blanket/pad and blanket/pad water temperature should be checked every twenty minutes. Surgical patients, temperature sensitive and pediatric patients should be checked more frequently. Notify the physician if the patient's core temperature does not reach the prescribed temperature in the time prescribed or deviates from the prescribed temperature range.

B. Changes in skin color, edema, inflammation, or indications of pressure, especially over bony prominences, should be noted and treated as ordered. Avoid prolonged tissue pressure and shearing forces over bony prominences.

C. The patient should be turned and properly positioned frequently.

3-5.Alarms and Error Displays

A. Power Failure Alarm
   1. If power is removed from the unit without actuating the power switch (I/O switch) a power fail alarm is activated and the LED located on the front panel of the unit flashes.
   2. If the Power Failure alarm occurs, turn the power switch off and unplug the unit if it is not already unplugged. Then, plug the unit into the power source and turn the power switch “ON”. If the Power Fail LED flashes and the audible alarm continues to sound, remove the unit from service and send to Biomedical Engineering for repair.

B. Low Water Alarm
   1. If at anytime, the water in the reservoir falls below 1 ½ quarts (1.4 liters) a low water level alarm will activate, the LO WATER LED located on the membrane control panel will flash and the unit will shut down.
   2. To clear the low water alarm, replenish the reservoir with distilled water as described in Section 5-1.5.

C. Primary High Temperature Safety Alarm
   1. If the circulating water reaches 43.5°C ± 0.6°C (110°F ± 1.08°F), the primary high temperature safety will activate to turn off the pump and turn off heater. In addition, the HI TEMP LED flashes and the audible alarm sounds.
   2. If the primary high temperature alarm occurs, the unit should be powered off and the power cord removed from the outlet. The unit should be immediately removed from service and sent to Biomedical Engineering for repair.

D. Secondary High Temperature Safety Alarm
   1. If the circulating water reaches 44.5°C ± 0.6°C (112°F ± 1.08°F) the secondary high temperature safety will activate to turn off the pump and the heater. In addition, the HI TEMP LED illuminates and the audible alarm sounds.

2. If the secondary high temperature alarm occurs, the unit should be powered off and the power cord removed from the outlet. The unit should be immediately removed from service and sent to Biomedical Engineering for repair.

E. Independent Mechanical High Temperature Safety Alarm
1. If the circulating water reaches 46.0°C ± 0.6°C (115°F ± 1.08°F) the independent mechanical high temperature safety will activate to shut off the power to the pump and heater. In addition, the HI TEMP LED and Power Fail LED illuminate, and the audible alarm sounds.
2. If the independent mechanical high temperature alarm occurs, the unit should be powered off and the power cord removed from the outlet. The unit should be immediately removed from service and sent to Biomedical Engineering for repair.

F. 1°C (2°F) Over Set point Alarm
1. If the set point temperature has been set at least 1°C (2°F) lower than the actual circulating water temperature, the 1°C (2°F) Over Set point Temperature Alarm will activate to turn off the heater, the HI TEMP LED flashes, the "WATER" display flashes the actual water temperature and the audible alarm sounds.
2. The heater will remain off, the HI TEMP LED will continue to flash and the "WATER" display will continue to flash until the actual circulating water temperature is within 1°C (2°F) of the set point temperature. No additional action is required.

G. Defective Water Temperature Sensor
1. If the "WATER" display reads "ERR" or "PF" the unit may have a defective water temperature sensor and an alarm will sound.
2. If the "WATER" display reads "ERR" or "PF" the unit should be powered off and the power cord removed from the outlet. The unit should be immediately removed from service and sent to Biomedical Engineering for repair.

Section 4. Operating the NORM-O-TEMP® System

4-0. Introduction

This section describes how to operate the NORM-O-TEMP® system in order to control the blanket/pad water temperature.

For proper knowledge and understanding of the unit, in-service training is available upon request.

4-1. Arranging the System Components

A. Collect all supplies and equipment
   a. NORM-O-TEMP® unit
   b. Hyper-hypothermia blanket/pad(s)
   c. Dry sheet, if necessary.
   d. Connecting hose, if necessary.
   e. Distilled water

B. Place the NORM-O-TEMP® unit in the patient area, accessible to the correct power source. Ensure the NORM-O-TEMP® unit is positioned to prevent tipping and unintended motion.

C. Refer to Section 1-3 for features of the unit and membrane control panel.

D. Check that the power switch is in the "O" position (unit is off).

E. Check the level of distilled water in the reservoir. To do so, slide the cover of the water fill opening and check if the water is visibly touching the strainer. If needed, carefully add distilled water. Do not use de-ionized water. Do not overfill. If the water falls below a preset level, the alarm sounds and the LO WATER LED lights up. The pump and heater shut down and the operator cannot proceed until this is corrected by refilling the unit and resetting the alarm.

F. Inspect the power plug for bent or missing prongs. Do not by-pass ground lug. **Electrical hazards may result.**

G. Insert the plug into a properly grounded hospital grade receptacle.

H. Lay the hyper-hypothermia blanket/pad flat with the hose routed, without kinks, towards the unit.

I. If the blanket/pad is already filled, check that there are no leaks. **Water leaks present a risk of infection. Leaking blankets/pads should never be used.**

J. Cover the blanket/pad with a dry sheet (if necessary).

K. Connect the blanket/pad to the NORM-O-TEMP® unit as described in Section 3-2.1.

L. If a single-patient use hyper-hypothermia blanket/pad is used, connect the couplings of the connecting hose to the blanket/pad as described in the instructions packaged with each blanket/pad.

M. The hyper-hypothermia blanket/pad may be pre-warmed before positioning the patient. To do so, operate the unit at desired temperature for about 25 minutes.

N. Place the patient on the hyper-hypo thermia blanket/pad.

O. If a top hyper-hypo thermia blanket/pad is to be used, cover with a dry sheet if necessary.

P. Connect the blanket/pad to the NORM-O-TEMP® unit following the procedure described in Section 3-2.1.

Q. If no top hyper-hypothermia blanket/pad is used, cover the patient with a top sheet and/or blanket/pad. Patient preparation and bedside care are further described in Section 3-4.

NOTE: *If at any time, power is removed from the unit without actuating the power switch (I/O switch) a power fail alarm will activate and the Power fail symbol LED located on the front of the unit will flash. To stop the alarm, restore power.*

4-2. Operating the NORM-O-TEMP® System

The NORM-O-TEMP® system operates based upon the actual temperature of the circulating water relative to the set point temperature. The NORM-O-TEMP® system heats and circulates the water.

Given the many variables such as patient size, weight, or condition, there is no direct relationship between the temperature of the circulating water and patient temperature. Both water temperature and patient temperature should be closely monitored.

4-3. Concluding the Use of the NORM-O-TEMP® System

NOTE: *It is important to drain the unit before placing in dry storage.*

After the patient temperature reaches the prescribed temperature for the prescribed amount of time, discontinue the use of the NORM-O-TEMP® unit as ordered. Patient's temperature can vary slightly up or down after therapy has been discontinued. The operator should continue to monitor the patient's temperature.

When the hyperthermia therapy has concluded and the unit is turned off:

A. Permit the blanket/pad(s) and hose to remain connected to the unit for about ten minutes. This allows some of the water to drain back into the unit.

B. Disconnect the power cord from the power source, loosely coil it and attach it to the back panel using the nylon straps.

C. Remove the blanket/pad(s).

D. Loosely coil the connecting hose and attach it to the back panel using the nylon straps, if necessary.

E. For reusable PLASTIPAD blanket/pad(s), loosely coil the hose lengthwise in the center of the blanket/pad. Fold the blanket/pad lengthwise into the center, 1/3 from the left side and 1/3 from the right side. Maintenance of the blanket/pad is described in Section 5-4.

For reusable Gelli-Roll blankets/pads either lay them flat or roll the blanket/pad. Do not fold the Gelli-Roll blankets/pads.

For Single-Patient Use blanket/pad(s), follow the instructions packaged with the blanket/pad. Dispose of blankets/pads in a manner consistent with hospital policy protocol for patient contact items.

Section 5. General Maintenance of the NORM-O-TEMP® System

5-0. Introduction

This section describes the general requirements maintenance personnel should complete on a regular basis so that the NORM-O-TEMP® system continues to operate within the manufacturer's specifications.

These maintenance requirements include changing and replenishing the water in the reservoir; cleaning the water filter, the exterior of the unit, the back vent, and the hyperthermia blanket/pad(s). Figure 7 provides a convenient checklist to record the required maintenance history of the unit.

The description of each requirement includes the tools, the procedures, and the precautions necessary to complete the requirements. Maintenance, repair and/or service of NORM-O-TEMP® by qualified maintenance/technical personnel will not void the warranty of the unit.

WARNING
• **Improper repair and inadequate maintenance can result in damage to the NORM-O-TEMP® system and patient injury.**
• **Before** returning the NORM-O-TEMP® to patient use **after** repairs, the FIRST TIME SET-UP/SYSTEM TEST ROUTINE in Section 3-2 must **always** be performed.

The following maintenance procedures should be performed quarterly.

A. Draining/Replenishing the Reservoir

B. Cleaning the Vent

C. Required Preventive Maintenance Checklist

D. Cleaning the Water Filter

E. Cleaning Water System

F. Cleaning the Exterior of the Unit

G. Cleaning Hyper-Hypothermia Blanket/pad(s)

Required Preventative Maintenance Checklist (Quarterly)

Hospital Control No. _____ Serial Number _____

Check When Completed

1. External cabinet in good condition. (No unusual dents or missing parts.) ☐
2. All labels properly affixed. ☐
3. Clean the unit's exterior. (See Section 5-3) ☐
4. Quick disconnect couplings are tight, straight, and not leaking. ☐
5. Power cord (no cuts or exposed wire) and plug (no bent or missing prongs). ☐
6. Indicator lights are operative. ☐
7. Drain and clean reservoir. See Section 5-1. ☐
   a. Check circulation through each male coupling with drain hose ☐
8. Clean water filter. See Section 5-2. ☐
9. Refill reservoir with distilled/sterile-distilled water. See Section 5-1.5 ☐
10. Check flow rate. ☐
    a. Flow rate: Minimum of 0.5 GPM (check both sets of fittings) ☐
    b. Pressure: Maximum of 10 PSI (check both sets of fittings) ☐
11. Condition of blanket/pad(s), hoses, and couplings (check for leaks). ☐
12. Check the low water safety. (See Section 5-1.4) ☐
13. All readings should be under 300μa for 115V units (See Op/Tech Manual): ☐
    a. OFF Normal Polarity ☐
    b. OFF Reverse Polarity ☐
    c. ON Normal Polarity ☐
    d. ON Reverse Polarity ☐
14. Check the high limit safeties (See Op/Tech Manual): ☐
    a. Primary: 43.5°C ± 0.6°C (110.0°F ± 1.08°F). ☐
    b. Secondary: 44.5°C ± 0.6°C (112.0°F ± 1.08°F). ☐
    c. Independent Mechanical: 46.0°C ± 0.6°C (115.0°F ± 1.08°F). ☐
15. Check the Power Interrupt Safety (See Op/Tech Manual). ☐
16. Ground Integrity Check: Verify the case to ground pin resistance (See Op/Tech Manual).

_____ _____

Signature of Inspector Date of Inspection

Figure 7. NORM-O-TEMP® Maintenance Checklist

5-1.Maintenance of Water Reservoir

The dual compartment reservoir holds approximately 1½ gallons (5.7 liters) of distilled water that remains in the unit between periods of use.

Once a month the water reservoir should be drained and replenished. The drain hose, included in the packaging of the unit, is attached and the water is pumped out of the unit. When the LO WATER alarm sounds, the remaining water is drained by gravity. Distilled/sterile-distilled water (or distilled water bacteriostatic agent preparation) is then poured into the reservoir.

Quarterly, at a minimum, the Internal Cleaning / Dry Storage Procedure, listed below, should be conducted.

NOTE: *DO NOT USE DE-IONIZED WATER OR ALCOHOL.*

CAUTION
• For safe handling and use of chemicals follow manufacturer guidelines.
• Always drain the NORM-O-TEMP® system to a sanitary drain because **bacteria** may be present in the unit's water supply.

Chemical Cleaning Circulation Chart

UNIT	MODE	TEMPERATURE	DURATION
NORM-O-TEMP 111Z	Heating	38°C	5 Minutes

5-1.1. Internal Clean using Bleach / Dry Storage Procedure

For circulating water units utilizing household bleach.

The following procedure cleans the fluid circuit in these products. The required tools/supplies are appropriate drain hose(s) and/or hose connector(s), household bleach, distilled water, U.S.P. Grade Propylene Glycol, and the appropriate AC electrical power

Procedure:

A. Drain the water from the reservoir as described in Section 5-1.4.

B. Turn unit off ("O" position).

C. Fill the reservoir with the appropriate amount of household bleach per the below chart.

UNIT	BLEACH	WATER
NORM-O-TEMP®, 111Z	168 Milliliters	5.4 Liters

D. Fill the reservoir with warm distilled water.

E. Turn the unit on and circulate per the Chemical Cleaning Circulation Chart (above).

F. Drain the unit as instructed in Step A.

G. Rinse the unit three (3) times as described in Steps D-F. Be sure to omit the household bleach (sodium hypochlorite).

H. After the third rinse, drain the unit and fill the reservoir with distilled water and circulate.

I. Check the water with pH strips or other appropriate test method for detecting bleach. If bleach is detected, repeat Steps F-H.

J. If unit is to be returned to service, once no bleach is detected, add the appropriate amount of U.S.P. Grade Propylene Glycol to the water reservoir per the following chart:

UNIT	U.S.P. Grade Propylene Glycol Per Unit
NORM-O-TEMP®, 111Z	12 ounces (340cc)

K. Continue to fill the water reservoir with distilled water.

L. If unit is being placed in dry storage skip steps J and K, continue with procedure at step M.

M. When all fluid has been removed from the unit, disconnect the drain hose(s) and wipe unit clean.

N. Unit is now ready for storage.

O. Document unit maintenance.

When you are ready to return unit to service, replenish the reservoir(s) with distilled water and 340 cc propylene glycol. Perform all the checks as described in the respective Manual.

5-1.2. Internal Cleaning and Disinfection Using Gigasept FF / Dry Storage Procedure

For Circulating Water Units Utilizing CE Approved Gigasept FF (Product of Schulke & Mayr) (Contact your local Cleaning Supplier). Gigasept FF Is Not Available In the United States.

The following procedure disinfects the fluid circuit in these products. The required tools/supplies are appropriate drain hose(s) and/or hose connector(s), Gigasept FF, distilled water, and the appropriate AC electrical power

Procedure:

A. Drain the water from the reservoir as described in Section 5-1.4.

B. Turn unit off ("O" position).

C. Fill the reservoir with the appropriate amount of Gigasept FF per the below chart.

UNIT	Gigasept FF	WATER
NORM-O-TEMP®, 111Z	168 Milliliters	5.4 Liters

D. Fill the reservoir with distilled water.

E. Turn the unit on and circulate per the Chemical Cleaning Circulation Chart (above).

F. Drain the unit as instructed in Step A.

G. Rinse the unit with Distilled Water three (3) times as described in Steps D-F. Be sure to omit Gigasept FF.

H. After the third rinse, drain the unit and fill the reservoir with distilled water and circulate.

I. Check the water with PH strips or other appropriate test method for Gigasept FF detection. If Gigasept FF is detected, repeat Steps 4-6.

J. If unit is to be returned to service, replenish reservoir(s) with the appropriate volume of distilled water.

K. If unit is being placed in dry storage, continue with procedure.

L. When all fluid has been removed from the unit, disconnect the drain hose(s) and wipe unit clean.

M. Unit is now ready for storage.

N. Document Unit Maintenance.

5-1.3. Internal Cleaning and Disinfection Using Maranon H / Dry Storage Procedure

For circulating water units utilizing CE approved Maranon H (Product of Ecolab). Maranon H is not available in the United States.

The following procedure disinfects the fluid circuit in these products. The required tools/supplies are appropriate drain hose(s) and/or hose connector(s), Maranon H, distilled water, and the appropriate AC electrical power.

Procedure:

A. Drain the water from the reservoir as described in Section 5-1.4.

B. Turn unit off ("O" position).

C. Fill the reservoir with the appropriate amount of Maranon H per the below chart.

UNIT	MARANON H	WATER
NORM-O-TEMP®, 111Z	168 Milliliters	5.4 Liters

D. Fill the reservoir with the appropriate amount of water per the above chart.

E. Turn the unit on and circulate per the Chemical Cleaning Circulation Chart (above).

F. Drain the unit as instructed in Step A.

G. Rinse the unit three (3) times as described in Steps D-F. Be sure to omit the Maranon H.

H. After the third rinse, drain the unit and fill the reservoir with distilled water and circulate.

I. Check the water with pH strips or other appropriate test method for Maranon H detection. If Maranon H is detected, repeat Steps D-F.

J. If unit is to be returned to service, replenish reservoir(s) with the appropriate volume of distilled water.

K. If unit is being placed in dry storage, continue with procedure.

L. When all fluid has been removed from the unit, disconnect the drain hose(s) and wipe unit clean.

M. Unit is now ready for storage.

N. Document unit maintenance.

5-1.4. Draining the Reservoir

CAUTION
• Always drain the NORM-O-TEMP® to a sanitary drain because bacteria may be present in the unit's water supply.

A. Collect these items:
   1. An empty container to drain the water into that can hold at least 3 gallons (11.4 liters).
   2. The drain hose with a female quick-disconnect coupling.
   3. 2 gallons (7.6 liters) distilled/sterile water to replenish the reservoir.

B. Insert the drain end of the hose into the 3 gallon (11.4 liters) container. Set the container on the floor so the hose drains downward.

C. Attach the female coupling of the drain hose to any one of the male outlet couplings on the right side of the unit.
   1. Slide back the collar of the female coupling.
   2. Insert the female coupling over the male coupling.
   3. Release the collar so the coupling 'Snaps' into position.

WARNING
• Do not by-pass ground lug. **Electrical Hazards may result.**

D. Plug the power cord into a properly grounded power outlet.

E. Place the power switch to the "I" position.

The water is pumped into the container until there is approximately 1½ quarts (1.4 liters) of water remaining to be drained. The LO WATER indicator lights up, the status display flashes and the alarm sounds. The unit shuts down but the water continues to drain into the container because of gravitational pull.

F. Press the power switch to the "O" position.

G. Disconnect the power cord from the power source.

H. After all the water has drained from the unit, disconnect the drain hose, wipe, clean and store in a dry environment without disinfecting. Refer to Section 5-3 for storage conditions specifications.

I. Discard the water drained from the unit.

J. If any other maintenance/repair is to be completed, go to the appropriate section, e.g., cleaning the water filter. If not, go to Section 5-1.5 to replenish the reservoir.

5-1.5. Replenishing the Reservoir / Fixing a Low Water Alarm

A. Check that the drain hose is disconnected.

CAUTION
• **Use distilled water only. Do Not Use De-Ionized water.**
• **Do not** use alcohol. Alcohol may cause blanket/pad deterioration.
• **Do not** overfill. Overfilling may result in overflow when the water in the blanket/pad drains back into the system when the system is turned off.

B. Slide the water fill opening lid to the left and gradually pour approximately 1½ gallons (5.7 liters) of distilled water with approximately 340 cc of propylene glycol into the reservoir (DO NOT USE ALCOHOL, TAP WATER, OR DE-IONIZED WATER).

C. Stop pouring when the water reaches the strainer visible at the bottom of the water fill opening.

D. Proceed with normal operations; always check the water level before starting.

5-2. Maintenance of the Water Filter

The NORM-O-TEMP® circulating system includes a water filter designed to clear the line of any particulate matter as the water is pumped through the system. The water filter assembly is a plastic T-shaped fitting that intersects the hose from the water flow indicator to the reservoir. A stainless steel wire-mesh screen is located inside the clear plastic cap of the water filter assembly.

Quarterly, or more often if deemed necessary, the water filter should be disassembled and cleaned. To do so, the reservoir must first be drained and the three sided enclosure panel removed. The cap of the water filter assembly is unscrewed. The wire mesh and the plastic cap are cleaned. The parts are then reassembled.

CAUTION
• Always drain the NORM-O-TEMP® system to a sanitary drain because **bacteria** may be present in the unit's water supply.

After draining the reservoir as described in Section 5-1.4:

A. Disconnect the unit from its power source.

WARNING
• The repair, calibration, and servicing of the NORM-O-TEMP® should be performed by qualified Medical Equipment Service Technicians, Certified Biomedical Electronics Technicians, or Certified Clinical Engineers familiar with good repair practices for servicing medical devices, and in accordance with instructions contained in this manual. **Improper repair can result in damage to the NORM-O-TEMP® system and patient injury.**
• Always **unplug the unit** before accessing internal components during service. Failure to unplug the unit could result in **electric shock.**

B. Remove the three sided enclosure panel.

C. Locate the water filter assembly.

D. Firmly grasp the notched rim of the cap of the assembly and turn it counterclockwise. The cap may contain a small amount of water.

E. Remove the wire mesh.

F. Clean the wire mesh and the plastic cap. Be careful not to lose the black O-ring in the rim of the plastic cap.

G. Replace the wire mesh in the plastic cap and position the wire mesh, O-ring and plastic cap.

H. Screw the cap clockwise onto the fitting until it is secure.

I. Replace the three sided enclosure panel.

J. Replenish the water reservoir as described in Section 5-1.5.

5-3. Maintenance of the NORM-O-TEMP® Exterior – Cleaning Instructions

The NORM-O-TEMP® unit is constructed of powder coated steel with a plastic top that should be cleaned quarterly with water and mild detergent solution. For cleaning and disinfecting, always use conventional hospital-approved topical equipment cleaners and disinfectants that do not contain alcohol. Avoid alcohol and other strong, undiluted disinfectants. These may cause staining of the device's outer skin. Thoroughly wipe down device with a damp cloth to remove any residue from cleaning solutions. Ensure that all inaccessible cracks and crevices on the NORM-O-TEMP® unit are reached during cleaning. In addition, ensure that all accessories associated with the NORM-O-TEMP® system are cleaned quarterly as well.

5-4. Maintenance of the Hyper-Hypothermia Blanket / Pad(s)

This section describes the general maintenance for the CSZ reusable and disposable blankets/pads. General maintenance tasks include cleaning, draining, and storing the reusable blankets/pads.

5-4.1. Cleaning / Maintenance of Reusable Blanket / Pad(s)

Cincinnati Sub-Zero reusable blankets/pads are constructed from biocompatible polyurethane/urethane. Stains and debris can be wiped away with mild soap and water. For cleaning, always use conventional hospital-approved topical cleaners and disinfectants that do not contain alcohol. Avoid alcohol or strong, undiluted disinfectants. These may cause staining of the device's outer skin. Thoroughly rinse product with clear water to remove any residue from cleaning solutions. DO NOT use gas sterilization or autoclaving for cleaning and disinfecting the blankets/pads.

To drain the water from the reusable blankets/pads simply shut off power to the unit and allow the water to drain from the blanket/pad back into the NORM-O-TEMP® unit.

To store PLASTIPAD blankets/pads, loosely coil the hose lengthwise into the center of the blanket/pad. Fold the blanket lengthwise into the center, 1/3 from the left side and 1/3

from the right side. Do not fold the blankets/pads width-wise, as doing so will crimp the tubing.

To store Gelli-Roll blankets/pads either lay them flat or roll the blanket/pad. Do not fold the Gelli-Roll blankets/pads.

Disposal of blankets/pads are done in a means consistent with hospital policy protocol for patient contact items.

5-4.2. Cleaning / Maintenance of Disposable, Single-Patient Use Blanket / Pad(s)

The reusable blanket/pad maintenance procedures do not apply to the disposable, single-patient use blankets/pads. Disposal of blankets/pads are done in a means consistent with hospital policy protocol for patient contact items.

Accessories

Stands

118	Stand/IV Pole
119	Low Profile Stand

Blankets / Pads

MAXI-THERM Single-Patient Use Blankets/pads

276	Adult or O.R. Table Size (24" x 60")
274	Pediatric Size (22" x 30")
273	Infant Size (12" x 18")
	Contents: 5/box, 4 boxes/case
286	Reusable Connecting Hose (for CSZ Unit)

MAXI-THERM LITE Single-Patient Use Blanket/pad(s)

876	Adult Size (25” x 64”)
874	Pediatric Size (25” x 33”)
873	Infant Size (12.5” x 18”)
872	Pediatric (25” x 19”)
871	Pediatric (25” x 17.25”)
870	Localized therapy (4” x 25”)
300	Staff vest

PLASTIPAD Reusable Molded Plastic Blanket/pad(s) (Polyurethane)

196	Adult Size (24" x 60")
195N	Narrow Adult Size (20” x 60”)
194	Pediatric Size (22" x 30")
193	Infant Size (12" x 18")
193CPC	Infant Size with CPC Connectors (12” x 18”)
186	9' Blanket Extension Hose with Couplings

Gelli-Roll Reusable Blanket/pad(s)

195P	Adult Size (73.5” x 21.5”)
194P	Pediatric Size (31.25” x 23.75”)
193P	Infant Size (20” x 13”)

Figure 8. NORM-O-TEMP® System Accessories

The following tables are presented in fulfillment of the requirements of IEC 60601-1-2

Guidance and manufacturer's declaration – electromagnetic emissions		
The NORM-O-TEMP®, Model 111Z is intended for use in the electromagnetic environment specified below. The customer or the user of the NORM-O-TEMP®, Model 111Z should assure that it is used in such an environment.		
Emissions tests	**Compliance**	**Electromagnetic environment – guidance**
RF emissions CISPR 11	Group 1	The NORM-O-TEMP®, Model 111Z uses RF energy only for its internal function. Therefore, its RF emissions are very low and are not likely to cause any interference in nearby electronic equipment.
RF emissions CISPR 11	Class A	The NORM-O-TEMP®, Model 111Z is suitable for use in all establishments other than domestic and those directly connected to the public low-voltage power supply network that supplies buildings used for domestic purposes.
Harmonic emissions IEC 61000-3-2	Class A	
Voltage fluctuations/ flicker emissions IEC 61000-3-3	Complies	

Guidance and manufacturer's declaration – electromagnetic immunity			
The NORM-O-TEMP®, Model 111Z is intended for use in the electromagnetic environment specified below. The customer or the user of the NORM-O-TEMP®, Model 111Z should assure that it is used in such an environment.			
Immunity test	**IEC 60601 test level**	**Compliance level**	**Electromagnetic environment - guidance**
Electrostatic discharge (ESD) IEC 61000-4-2	±6 kV contact ±8 kV air	±6 kV contact ±8 kV air	Floors should be wood, concrete or ceramic tile. If floors are covered with synthetic material, the relative humidity should be at least 30%.
Electrical fast transient/burst IEC 61000-4-4	±2 kV for power supply lines ±1 kV for input/output lines	±2 kV for power supply lines ±1 kV for input/output lines	Mains power quality should be that of a typical commercial or hospital environment.
Surge IEC 61000-4-5	±1 kV differential mode ±2 kV common mode	±1 kV differential mode ±2 kV common mode	Mains power quality should be that of a typical commercial or hospital environment.
Voltage dips, short interruptions and voltage variations on power supply input lines IEC 61000-4-11	<5% U_T (>95% dip in U_T) for 0,5 cycle 40% U_T (60% dip in U_T) for 5 cycles 70% U_T (30% dip in U_T) for 25 cycles <5% U_T (>95% dip in U_T) for 5 s	<5% U_T (>95% dip in U_T) for 0.5 cycle 40% U_T (60% dip in U_T) for 5 cycles 70% U_T (30% dip in U_T) for 25 cycles <5% U_T (>95% dip in U_T) for 5 s	Mains power quality should be that of a typical commercial or hospital environment. If the user of the NORM-O-TEMP®, Model 111Z requires continued operation during power mains interruptions, it is recommended that the NORM-O-TEMP®, Model 111Z be powered from an uninterruptible power supply or a battery.
Power frequency (50/60 Hz) magnetic field IEC 61000-4-8	3 A/m	3 A/m	Power frequency magnetic fields should be at levels characteristic of a typical location in a typical commercial or hospital environment.
Note: U_T is the a.c. mains voltage prior to application of the test level.			

Guidance and manufacturer's declaration – electromagnetic immunity			
The NORM-O-TEMP®, Model 111Z is intended for use in the electromagnetic environment specified below. The customer or the user of the NORM-O-TEMP®, Model 111Z should assure that it is used in such an environment.			
Immunity test	**IEC 60601 test level**	**Compliance level**	**Electromagnetic environment - guidance**
Conducted RF IEC 61000-4-6	3 Vrms 150 kHz to 80 MHz	3 Vrms	Portable and mobile RF communications equipment should be used no closer to any part of the NORM-O-TEMP®, Model 111Z, including cables, than the recommended separation distance calculated from the equation applicable to the frequency of the transmitter. **Recommended separation distance** $d = 1{,}2\sqrt{P}$
Radiated RF IEC 61000-4-3	3 V/m 80 MHz to 2,5 GHz	3 V/m	$d = 1{,}2\sqrt{P}$ 80 MHz to 800 MHz $d = 2{,}3\sqrt{P}$ 800 MHz to 2,5 GHz Where *P* is the maximum output power rating of the transmitter in watts (W) according to the transmitter manufacturer and *d* is the recommended separation distance in meters (m). Field strengths from fixed RF transmitters, as determined by an electromagnetic site survey,[a] should be less than the compliance level in each frequency range.[b] Interference may occur in the vicinity of equipment marked with the following symbol:
NOTE 1: At 80 MHz and 800 MHz, the higher frequency range applies. **NOTE 2:** These guidelines may not apply in all situations. Electromagnetic propagation is affected by absorption and reflection from structures, objects and people.			
[a] Field strengths from fixed transmitters, such as base stations for radio (cellular/cordless) telephones and land mobile radios, amateur radio, AM and FM radio broadcast and TV broadcast cannot be predicated theoretically with accuracy. To assess the electromagnetic environment due to fixed RF transmitters, an electromagnetic site survey should be considered. If the measure field strength in the location in which the NORM-O-TEMP®, Model 111Z is used exceeds the applicable RF compliance level above, the NORM-O-TEMP®, Model 111Z should be observed to verify normal operation. If abnormal performance is observed, additional measures may be necessary, such as re-orienting or relocating the NORM-O-TEMP®, Model 111Z. [b] Over the frequency range 150 kHz to 80 MHz, field strengths should be less than 3 V/m.			

Recommended separation distances between portable and mobile RF communications equipment and the NORM-O-TEMP®, Model 111Z

The NORM-O-TEMP®, Model 111Z is intended for use in an electromagnetic environment in which radiated RF disturbances are controlled. The customer or the user of the NORM-O-TEMP®, Model 111Z can help prevent electromagnetic interference by maintaining a minimum distance between portable and mobile RF communications equipment (transmitters) and the NORM-O-TEMP®, Model 111Z as recommended below, according to the maximum output power of the communications equipment.

Rated maximum output power of transmitter W	**Separation distance according to frequency of transmitter** m		
	150 kHz to 80 MHz $d = 1{,}2\sqrt{P}$	**80 MHz to 800 MHz** $d = 1{,}2\sqrt{P}$	**800 MHz to 2,5 GHz** $d = 2{,}3\sqrt{P}$
0,01	0,12	0,12	0,23
0,1	0,38	0,38	0,73
1	1,2	1,2	2,3
10	3,8	3,8	7,3
100	12	12	23

For transmitters rated at a maximum output power not listed above, the recommended separation distance *d* in meters (m) can be estimated using the equation applicable to the frequency of the transmitter, where *P* is the maximum output power rating of the transmitter in watts (W) according to the transmitter manufacturer.

Note 1: At 80 MHz and 800 MHz, the separation distance for the higher frequency range applies.

Note 2: These guidelines may not apply in all situations. Electromagnetic propagation is affected by absorption and reflection from structures, objects and people.

THIS PAGE INTENTIONALLY LEFT BLANK

Cincinnati Sub-Zero Products, LLC
12011 Mosteller Road
Cincinnati, OH 45241

■ Telephone: 1-800-989-7373 or (513)772-8810 ■ Fax: (513)772-9119
■ E-Mail: csz@cszgentherm.com